STANDARD SINGLE, HILLSIDE AND DOUBLE CURB INLETS

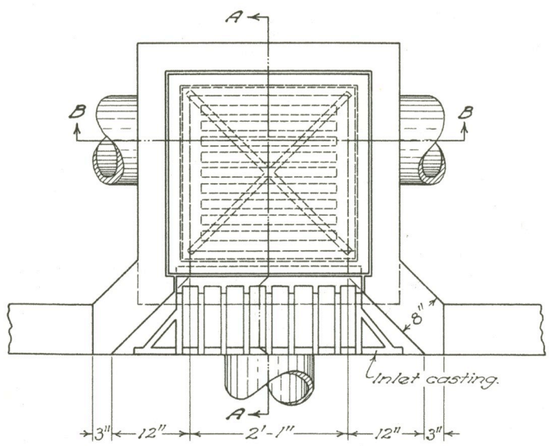

PLAN OF SINGLE INLET

No. 2

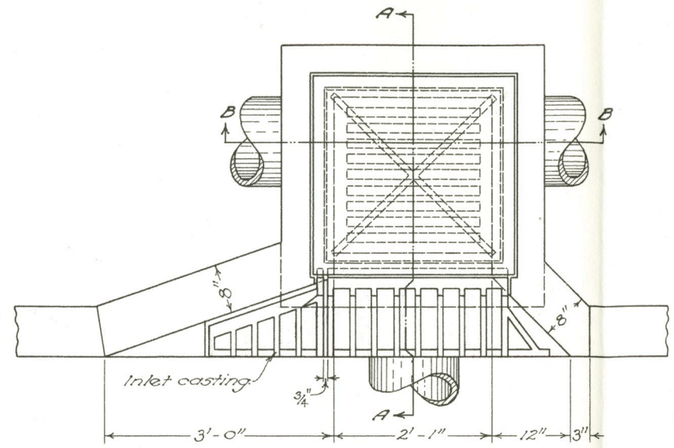

PLAN OF HILLSIDE INLET

No. 3

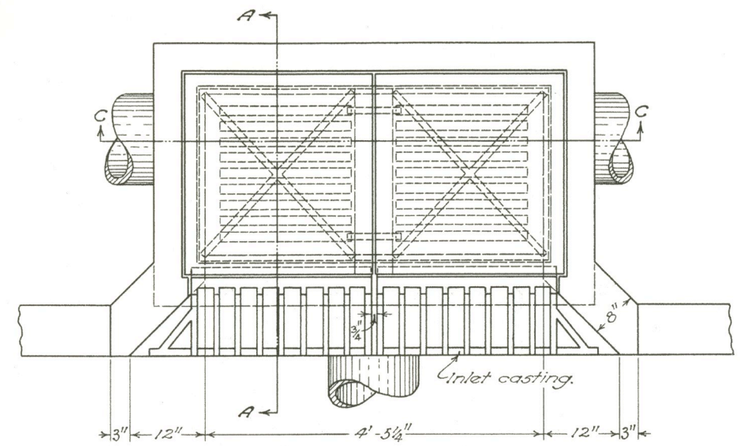

PLAN OF DOUBLE INLET

No. 4

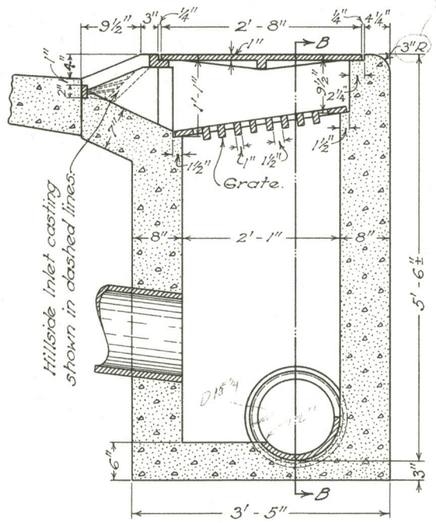

SECTION A-A

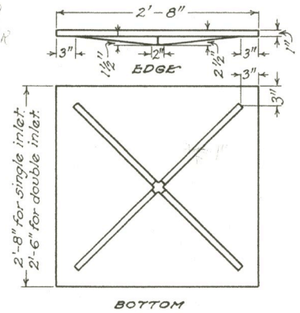

CAST IRON COVER PLATE

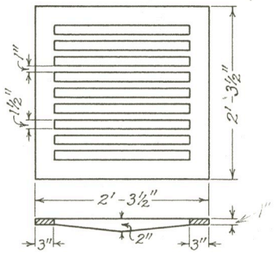

DETAIL OF GRATE

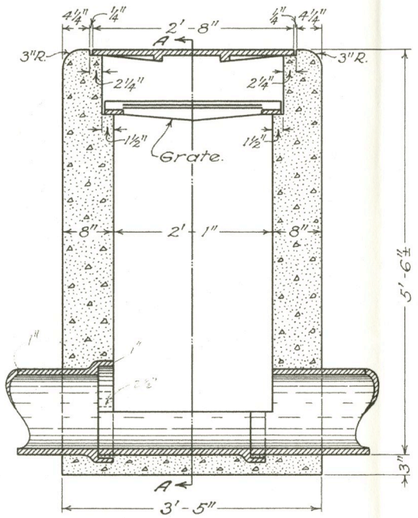

SECTION B-B

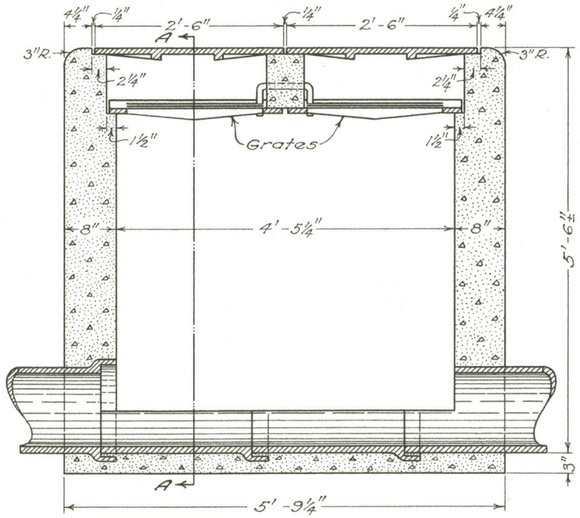

SECTION C-C

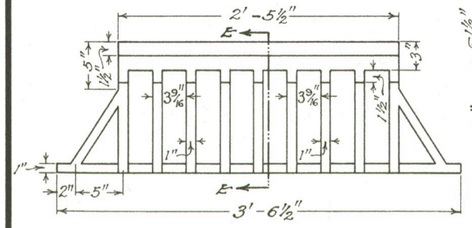

SINGLE INLET CASTING

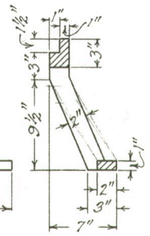

SECTION E-E

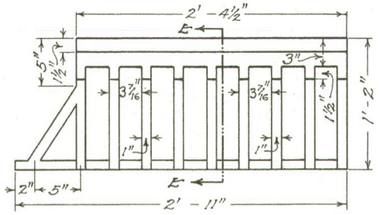

HALF OF DOUBLE INLET CASTING

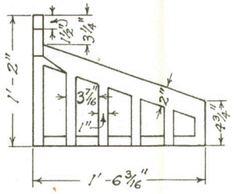

HILLSIDE INLET CASTING
For use with one half of double inlet casting.

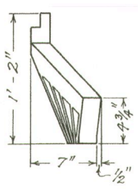

END VIEW HILLSIDE CASTING

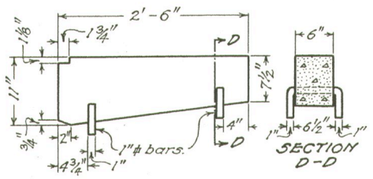

CONCRETE SUPPORT FOR COVER PLATE
For double inlet only.
1:5 1/2 Mix.

NOTES

CASTINGS:—
Castings may be made in accordance with details shown herewith, or may be of similar design but of equal weight.

CONCRETE:—
Concrete to be 1:5 1/2 mix.

BUREAU OF LOCATION & DESIGN
OHIO
DEPARTMENT OF HIGHWAYS

CURB INLETS

STANDARD CONSTRUCTION DRAWING I-8 I. No. 2, 3 & 4

APPROVED _____ CHIEF ENGINEER

SEPT. 193
AUG.-193

STANDARD SINGLE, HILLSIDE AND DOUBLE CURB INLETS

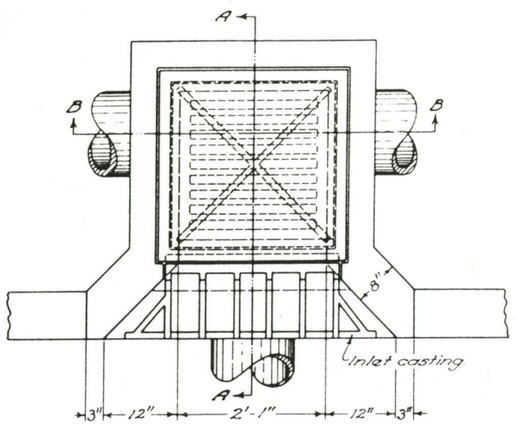

PLAN OF SINGLE INLET
No 2

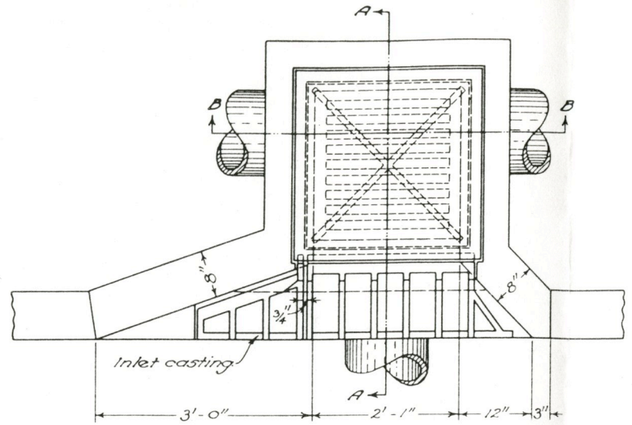

PLAN OF HILLSIDE INLET
No 3

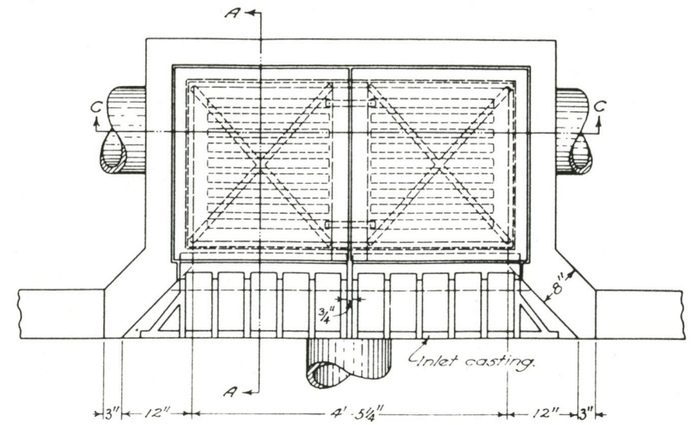

PLAN OF DOUBLE INLET
No 4

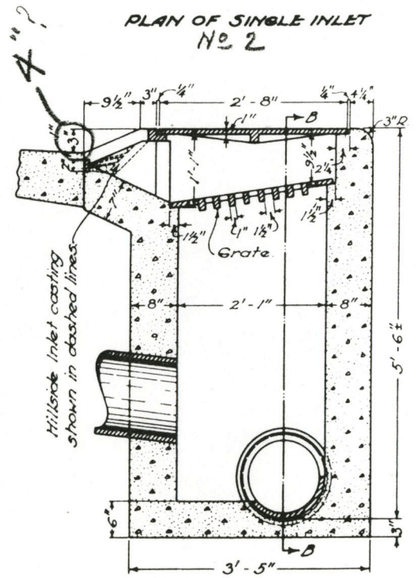

SECTION A-A

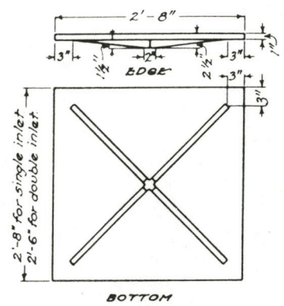

CAST IRON COVER PLATE

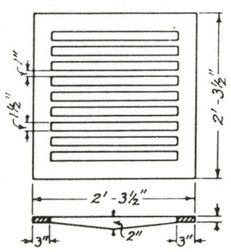

DETAIL OF GRATE

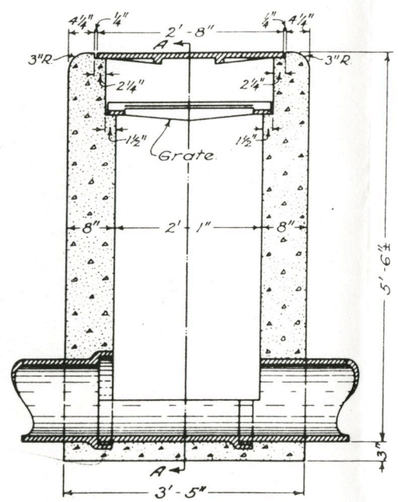

SECTION B-B

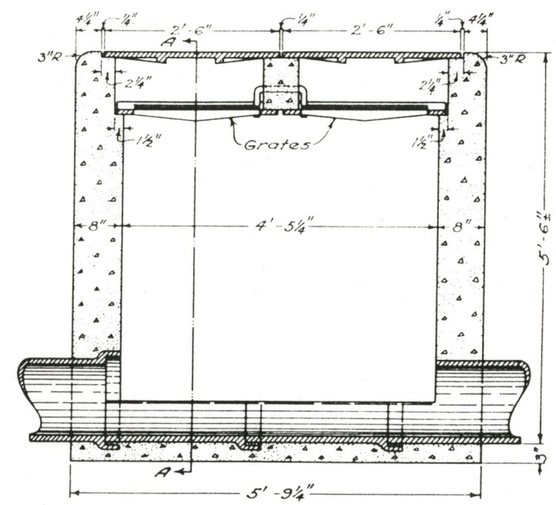

SECTION C-C

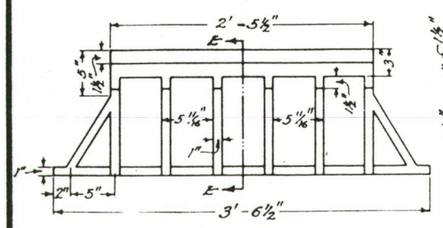

SINGLE INLET CASTING

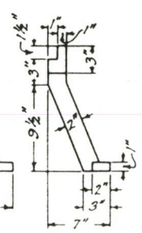

SECTION E-E

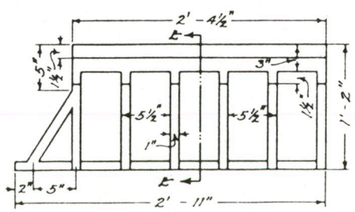

HALF OF DOUBLE INLET CASTING

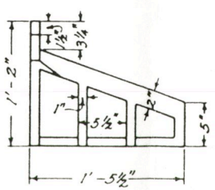

HILLSIDE INLET CASTING
For use with one half of double inlet casting.

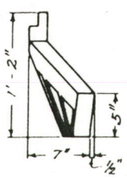

END VIEW HILLSIDE CASTING

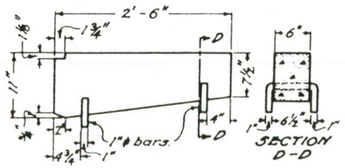

CONCRETE SUPPORT FOR COVER PLATE
For double inlet only.
1:5½ Mix.

NOTES

CASTINGS:—
Castings may be made in accordance with details shown herewith, or may be of similar design but of equal weight.

CONCRETE:—
Concrete to be 1:5½ mix.

BUREAU OF CONSTRUCTION
OHIO
DEPARTMENT OF HIGHWAYS

CURB INLETS

STANDARD CONSTRUCTION DRAWING I-8 I. No. 2, 3 & 4

APPROVED E. H. CHIEF ENGR. CONST.

SEPT. 1933