STANDARD No. 4A CURB INLET

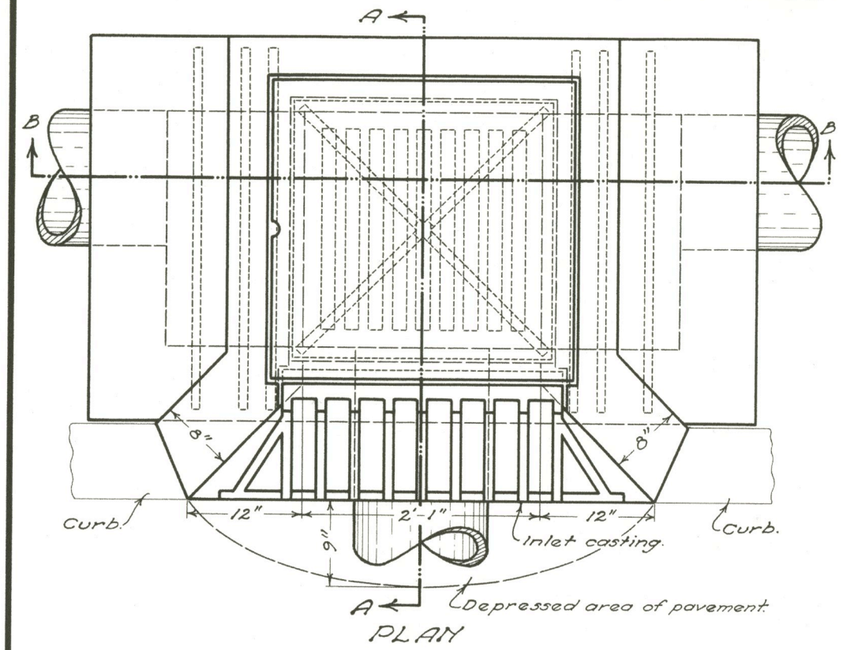

PLAN

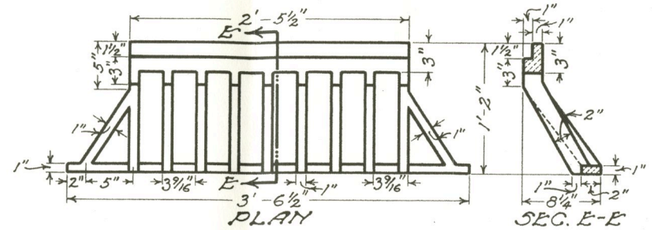

PLAN SEC. E-E

INLET CASTING

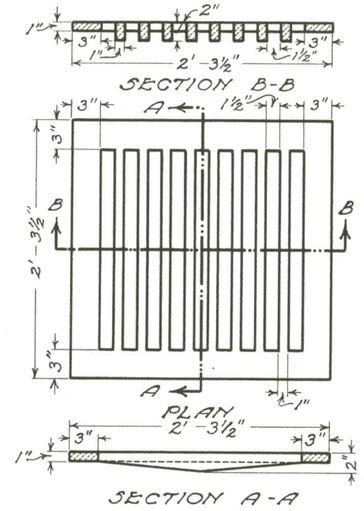

SECTION B-B

PLAN

SECTION A-A

GRATE

NOTES

CASTINGS shall be of cast iron in accordance with Material Details. The designs shall be essentially the same and equally as strong as those shown hereon and shall be given one coat of asphaltum paint as per specifications.

WEIGHTS approximately are:—

Cover plate	328 lbs.
Grate	155 lbs.
Curb casting	125 lbs.

CONCRETE shall be 1-5½ mix.

BRICK side walls, when used in place of concrete, shall be 8 in. in thickness and to be plastered on the inside and outside with 1-2 cement mortar ½ in. thick.

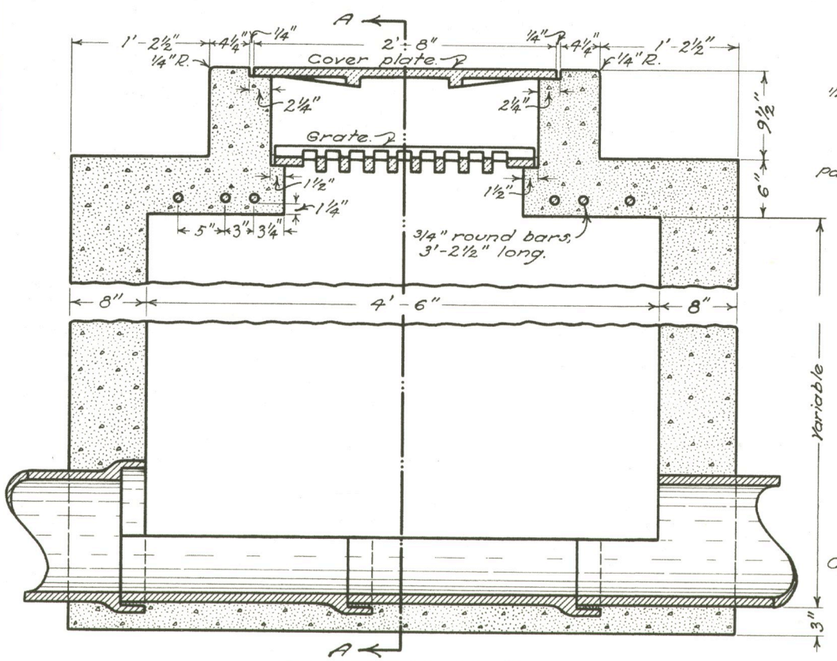

SECTION B-B

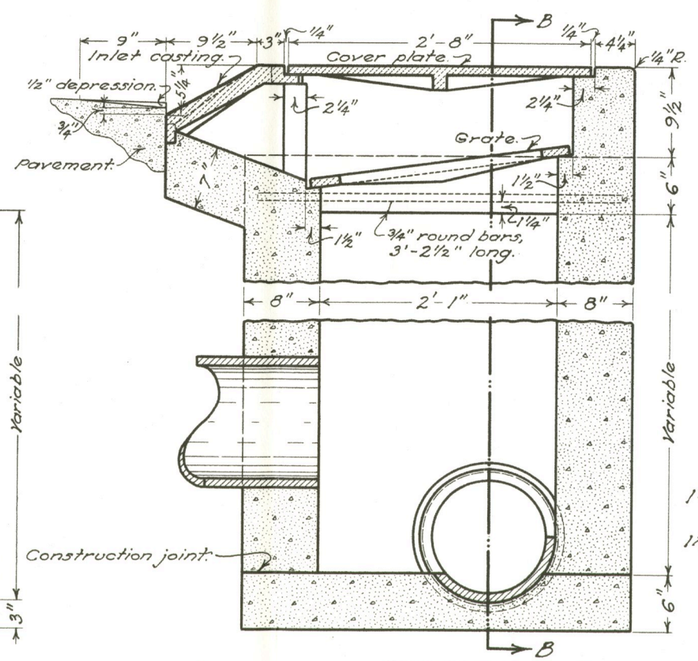

SECTION A-A

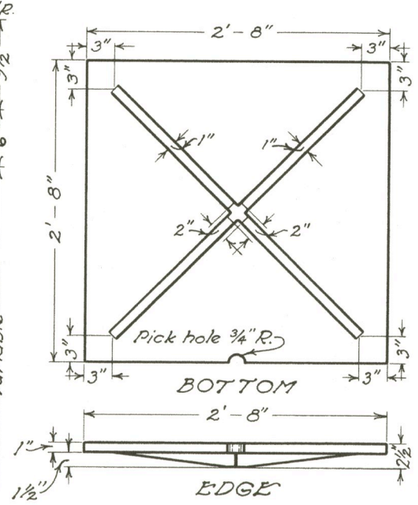

COVER PLATE

BUREAU OF LOCATION & DESIGN
OHIO DEPARTMENT OF HIGHWAYS

2-1-'36

CURB INLET

STANDARD CONSTRUCTION DRAWING

I-8 I.
No. 4A

APPROVED K.L.R. CHIEF ENGINEER

STANDARD No. 4A CURB INLET

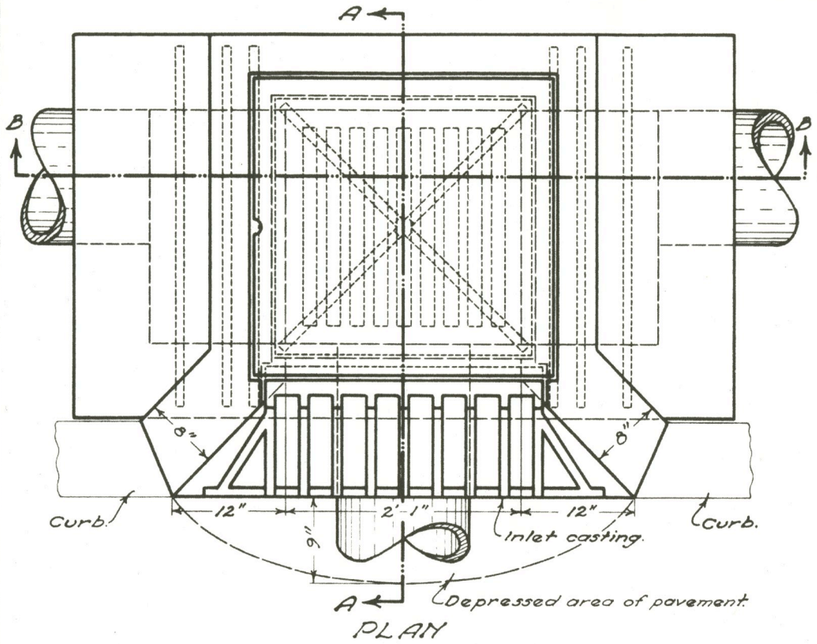

PLAN

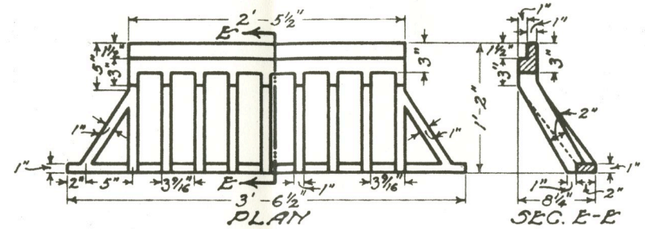

INLET CASTING

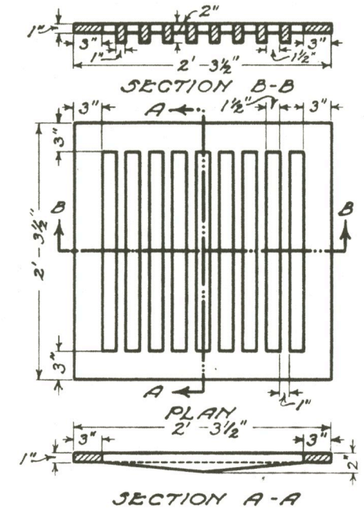

GRATE

NOTES

CASTINGS shall be of cast iron in accordance with Material Details. The designs shall be essentially the same and equally as strong as those shown hereon and shall be given one coat of asphaltum paint as per specifications.

WEIGHTS approximately are:—

Cover plate	328 lbs.
Grate	155 lbs.
Curb casting	125 lbs.

CONCRETE shall be Class "C".

BRICK side walls, when used in place of concrete, shall be 8 in. in thickness and to be plastered on the inside and outside with 1-2 cement mortar ½ in. thick.

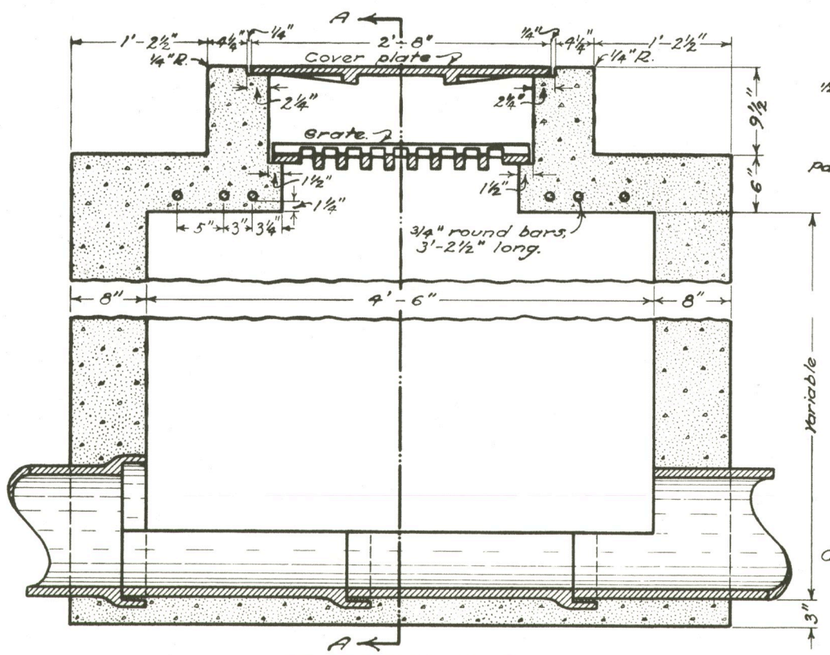

SECTION B-B

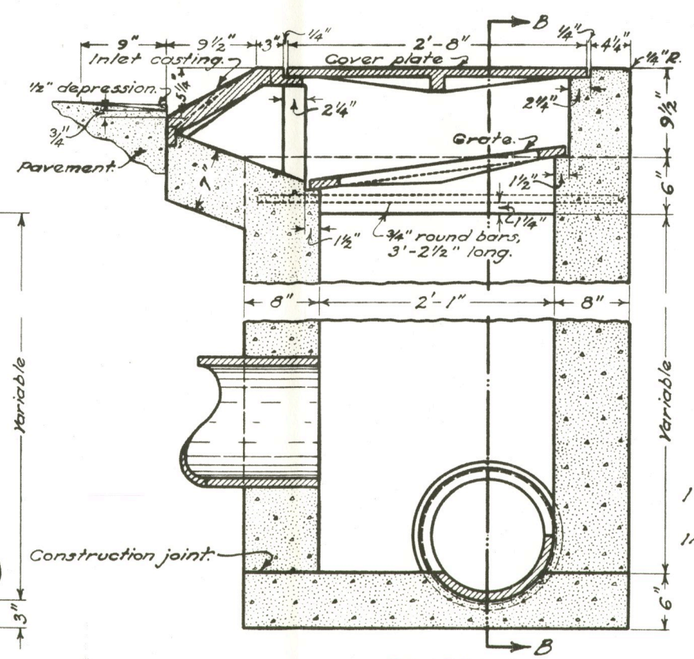

SECTION A-A

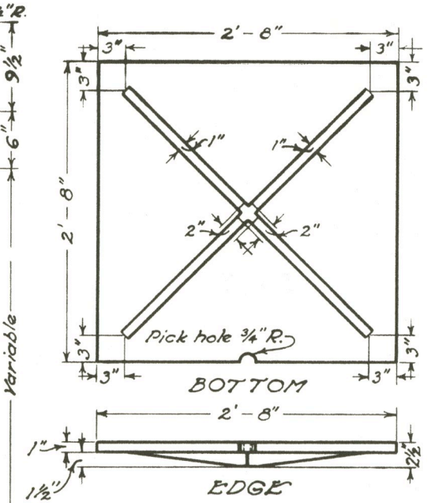

COVER PLATE

BUREAU OF LOCATION & RIGHT OF WAY
OHIO DEPARTMENT OF HIGHWAYS

CURB INLET

DATE 2-1-36 3-1-39

STANDARD CONSTRUCTION DRAWING I-8 I. No. 4A

APPROVED G. S. CHIEF ENGINEER