STANDARD CURB INLET FOR STEEP GRADES

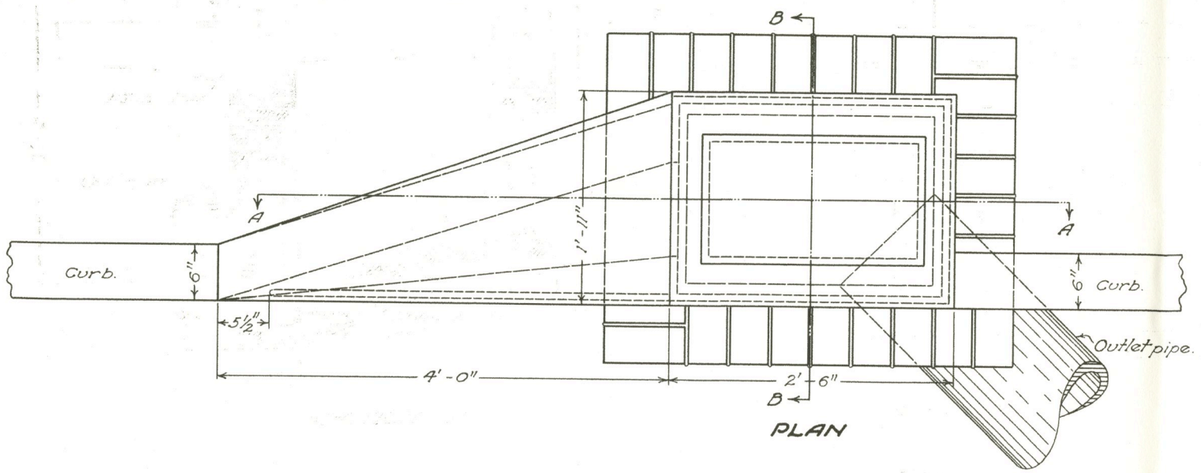

PLAN

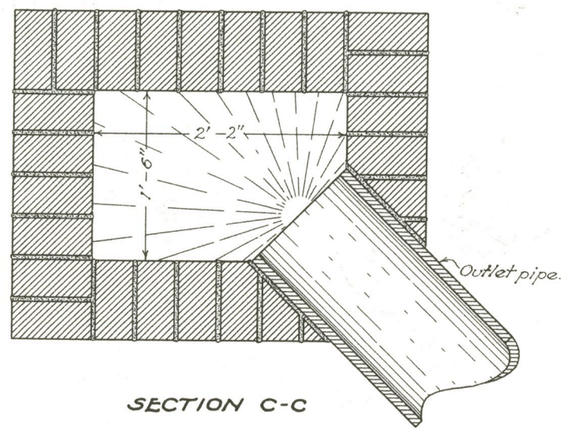

SECTION C-C

NOTES

CASTINGS:-
The casting for this type of inlet shall be of the dimensions shown, but may vary in design to conform with the design previously used in the various divisions.

OUTLET:-
The outlet shall be of the size shown on the plans and may be constructed in any side.

BOTTOM:-
Bottom shall be built as per plans of 1:5½ concrete or grouted brick.

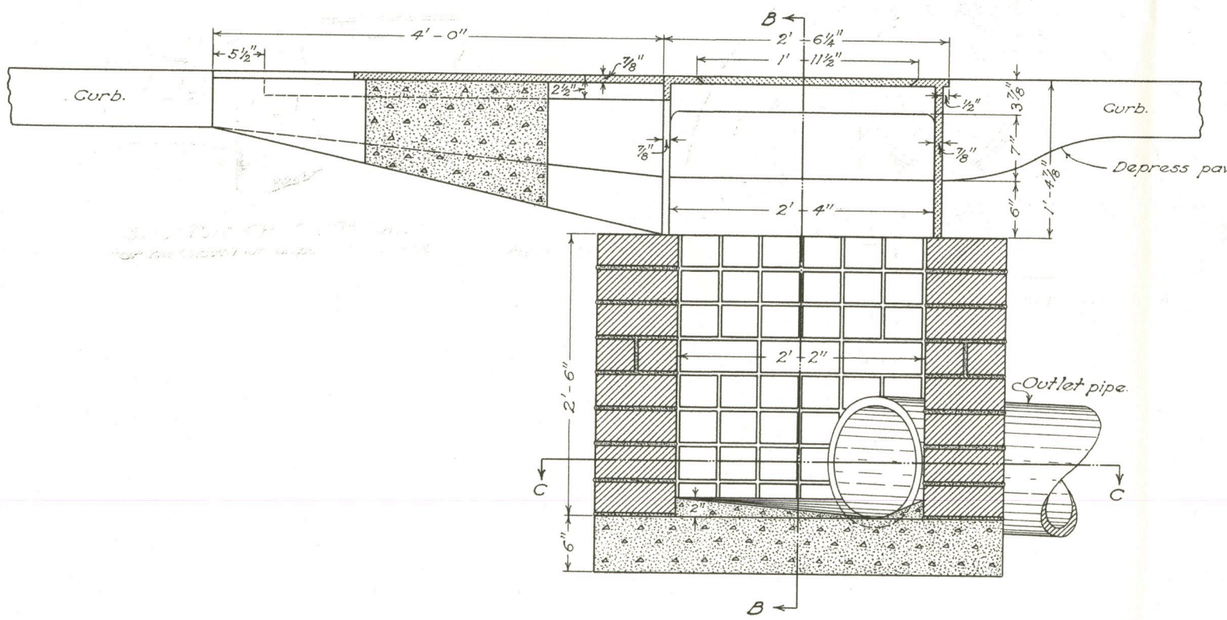

SECTION A-A

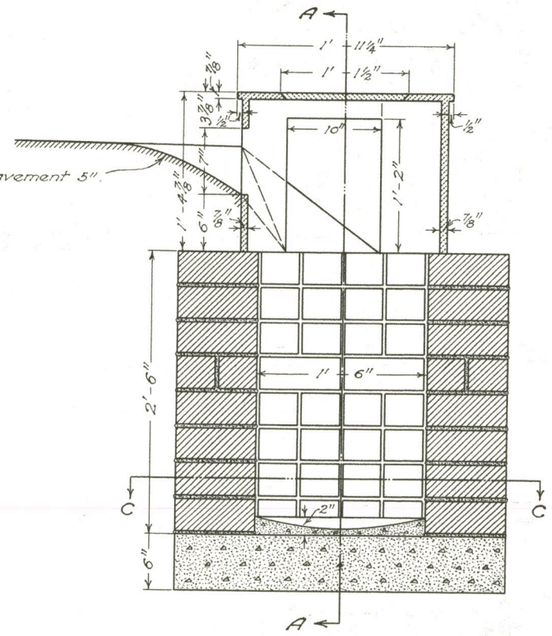

SECTION B-B

BUREAU OF LOCATION & DESIGN
OHIO
DEPARTMENT OF HIGHWAYS

JULY 1933

CURB INLET

STANDARD CONSTRUCTION DRAWING

I-8 I.
No. 5

APPROVED _____ CHIEF ENGINEER

STANDARD CURB INLET FOR STEEP GRADES

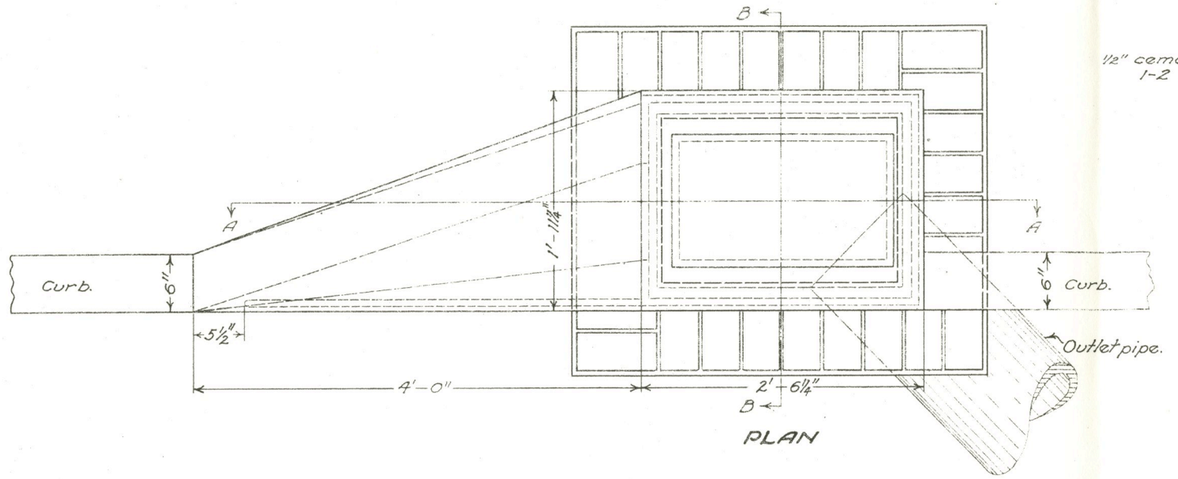

PLAN

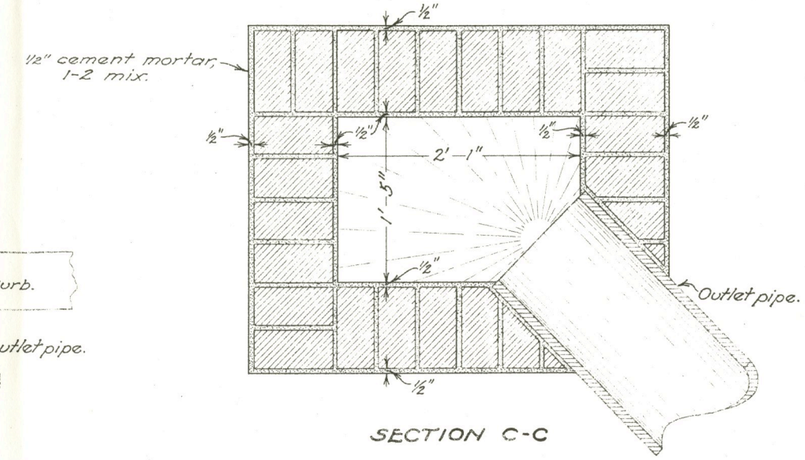

SECTION C-C

NOTES

CASTING shall be of cast iron in accordance with Material Details. The casting for this type inlet shall be of the dimensions shown, but may vary in design to conform with the design previously used in the various divisions, and shall be given one coat of asphaltum paint as per specifications. Weight approximately 625 pounds.

BRICK side walls shall be 8" in thickness, and to be plastered on the inside and outside with 1-2 cement mortar ½" thick.

BOTTOM shall be built as per plans of 1-5½ concrete or grouted brick.

OUTLET shall be of the size shown on the plans and may be constructed in any side.

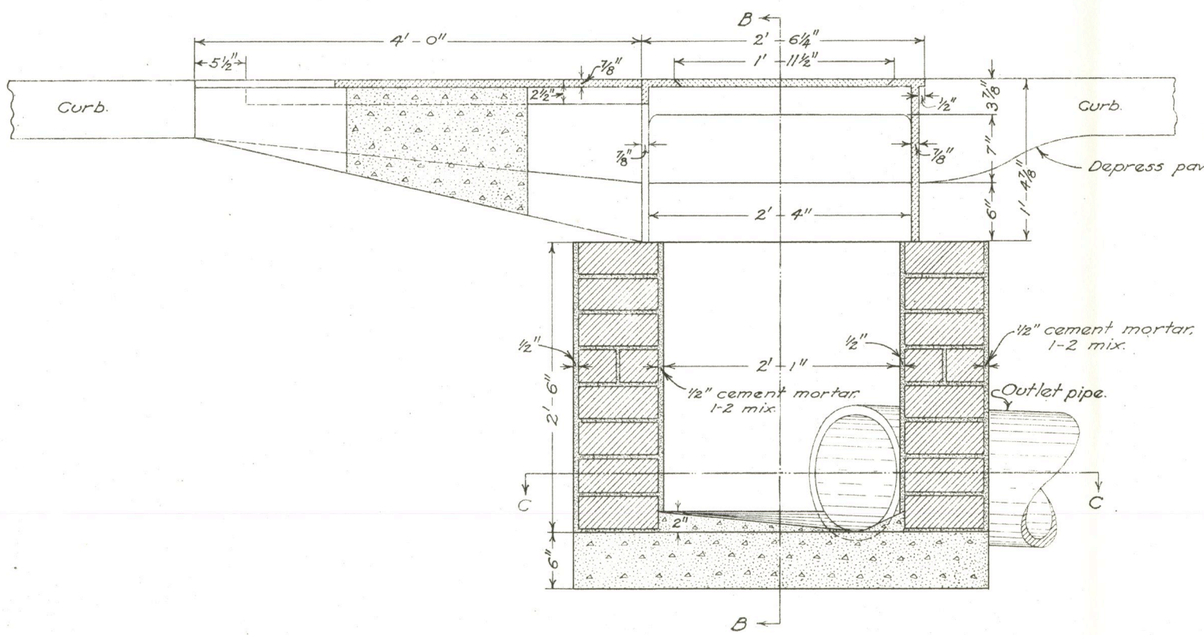

SECTION A-A

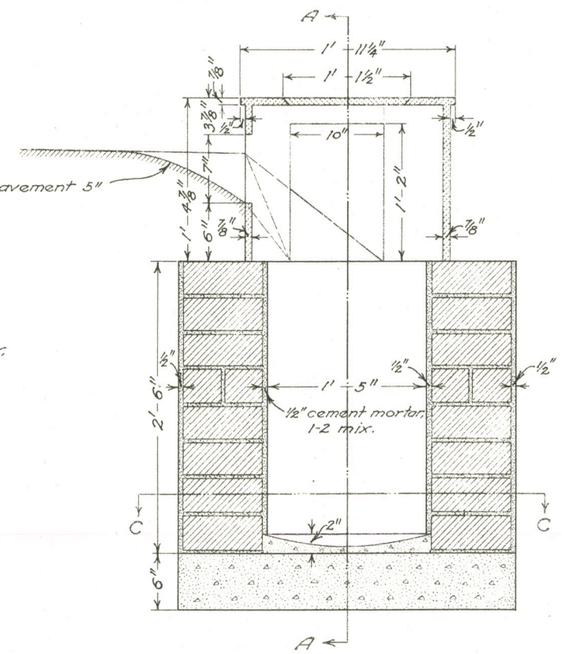

SECTION B-B

BUREAU OF LOCATION & DESIGN OHIO DEPARTMENT OF HIGHWAYS	7-1933 1-1-'36
CURB INLET	
STANDARD CONSTRUCTION DRAWING	I-8 I. No. 5
APPROVED K. L. R. CHIEF ENGINEER	

STANDARD CURB INLET FOR STEEP GRADES

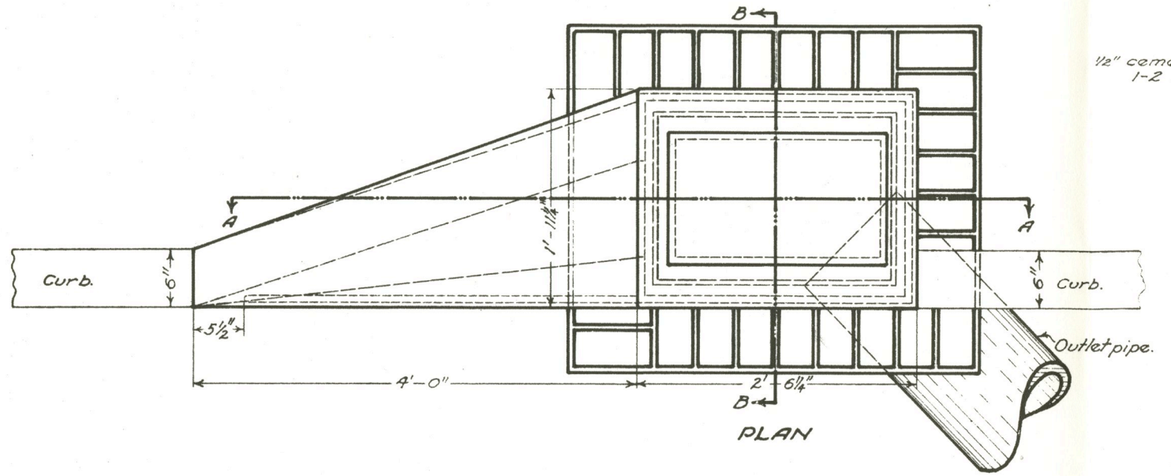

PLAN

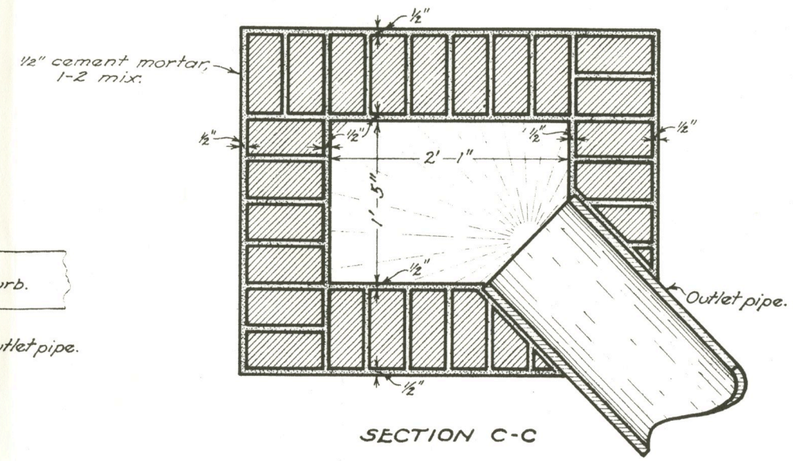

SECTION C-C

NOTES

CASTING shall be of cast iron in accordance with Material Details. The casting for this type inlet shall be of the dimensions shown, but may vary in design to conform with the design previously used in the various divisions, and shall be given one coat of asphaltum paint as per specifications. Weight approximately 625 pounds.

BRICK side walls shall be 8" in thickness, and to be plastered on the inside and outside with 1-2 cement mortar ½" thick.

BOTTOM shall be built as per plans of Class "C" concrete or grouted brick.

OUTLET shall be of the size shown on the plans and may be constructed in any side.

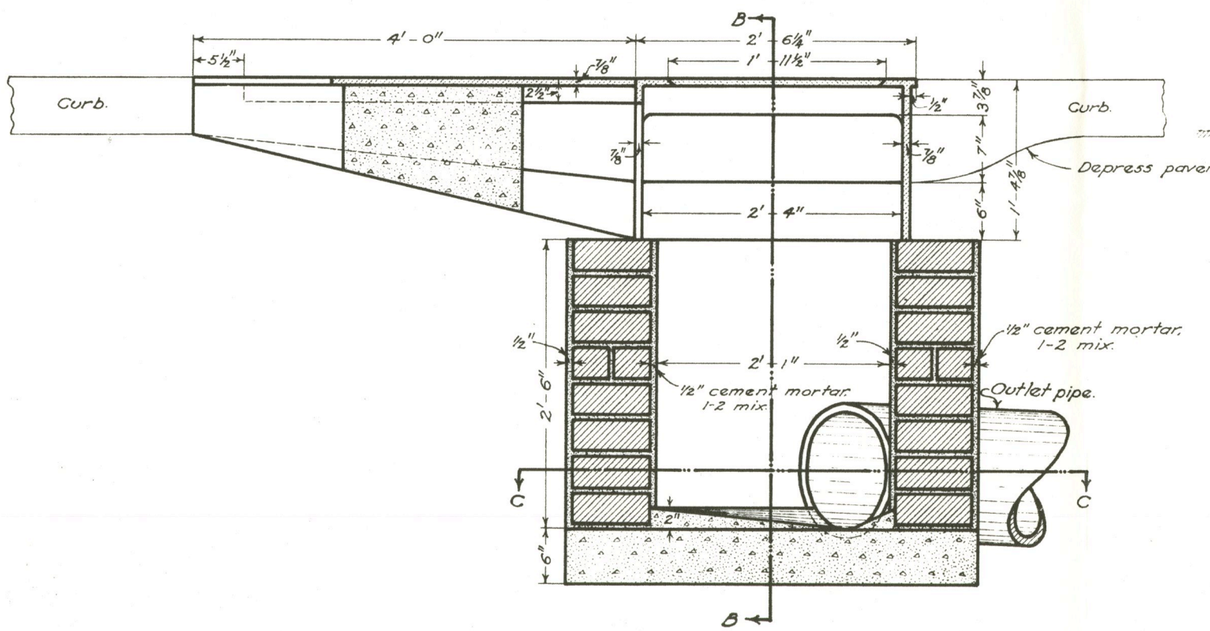

SECTION A-A

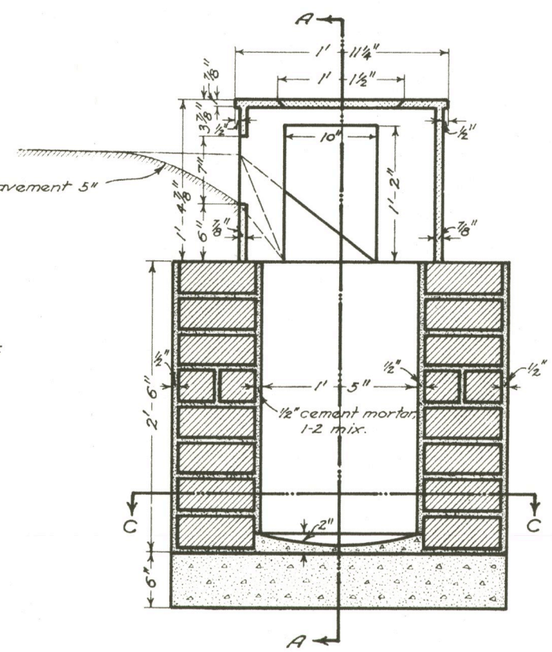

SECTION B-B

BUREAU OF LOCATION & RIGHT OF WAY
OHIO DEPARTMENT OF HIGHWAYS

CURB INLET

DATE
7-1933
1-1-36
3-1-39

STANDARD CONSTRUCTION DRAWING I-8 I. No. 5

APPROVED G. S. L. CHIEF ENGINEER